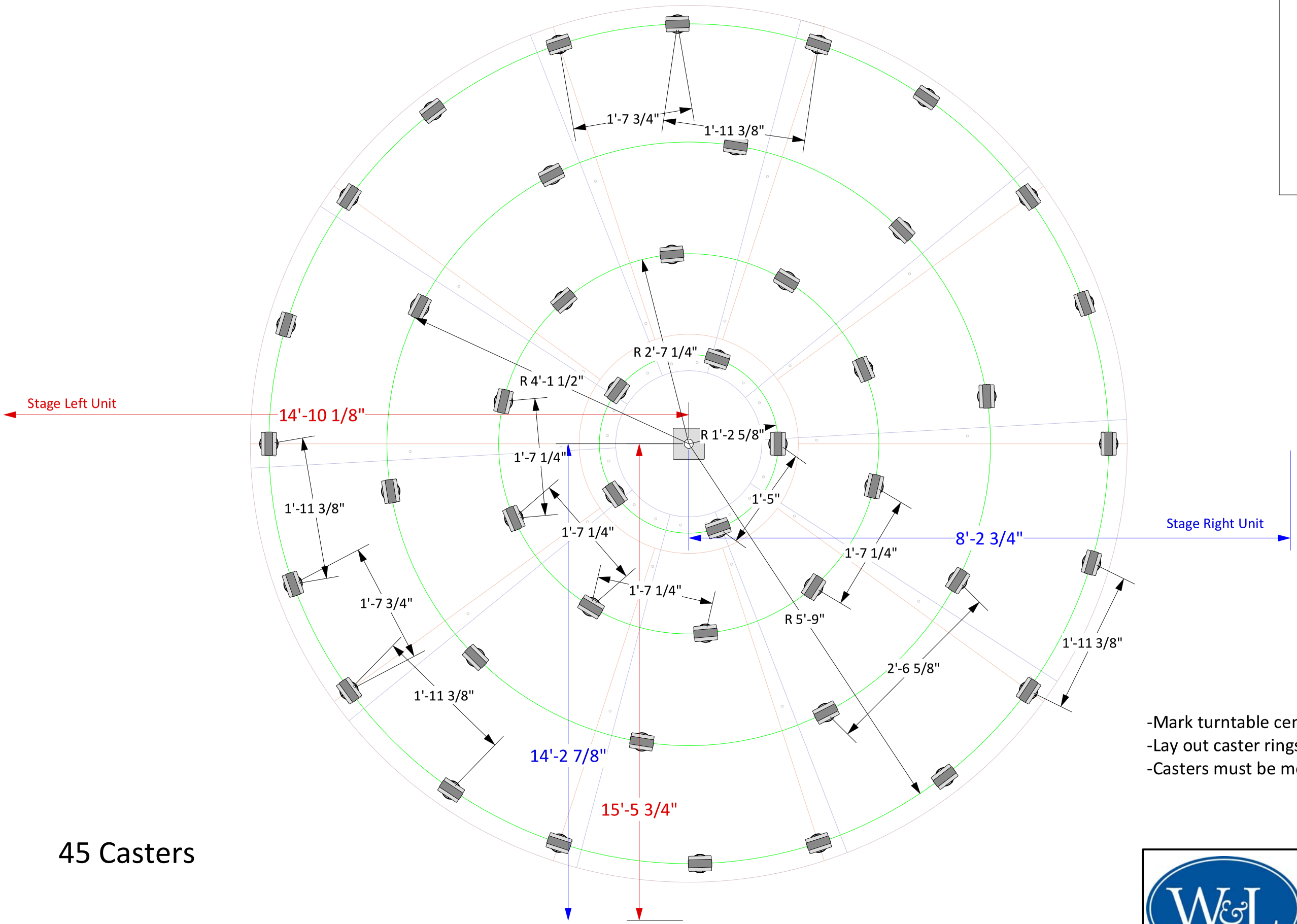

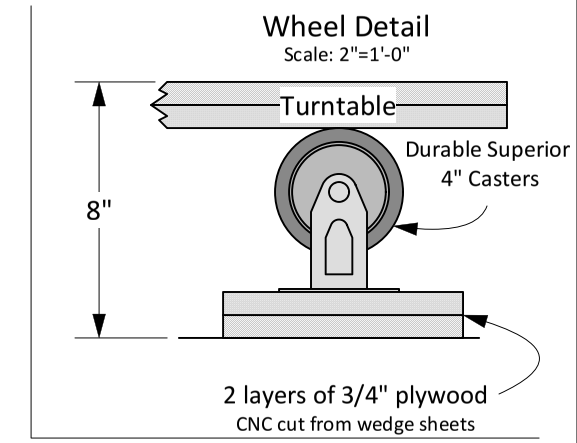

-Mark turntable centers on stage floor.
-Lay out caster rings.
-Casters must be mounted parallel to the rings.

45 Casters

W&L JOHNSON THEATER	Turntable Wheel Placement	
	Drawn by: Tom Hackman	Scene Designer: Owen Collins
	THE CHERRY ORCHARD	Plate: T2
	Scale: 3/4"=1'-0"	Date: 13 Dec 18